Understanding Ethernet LAN Concepts

2

A LAN allows various network components, located in different places, to communicate with each other. The components may be located on the floor of a building, within a building, or on a campus. In a LAN, common components are computers (PCs and servers), interconnections (NICs, cabling, and wireless), network devices (routers, switches, hubs), and protocols (Ethernet and TCP/IP).

Ethernet is the most common layer 2 protocol used to connect LANs. The Ethernet uses the CSMA/CD approach. The token ring, token bus, and Fibre Distribution Data Interface (FDDI) use the token-passing approach.

OBJECTIVES

By the end of this chapter, you will be able to:

- Understand the CSMA/CD approach of Ethernet
- Describe hardware addressing
- Understand framing in Ethernet
- Describe the original and expanded Ethernet standards
- Compare the different types of cables

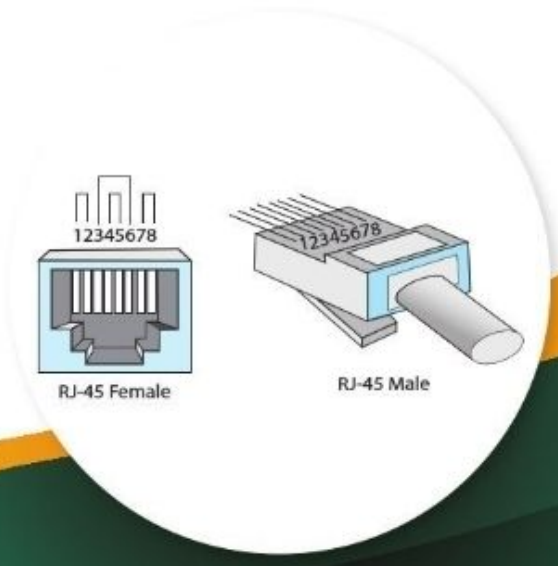

In 1985, Project 802 was started by the IEEE to set the standards for communication between equipment by different manufacturers. This project also intended to set the functions of the physical layer and the data-link layer of major LAN protocols. This chapter describes the data-link layer and physical layer functions of the Ethernet. We will also discuss the two types of Ethernet frames and the cabling used in the Ethernet.

Ethernet Evolution and Standards

CERTIFICATION OBJECTIVE

Understand the CSMA/CD approach of Ethernet

Ethernet is the most common LAN protocol. The precursor to the Ethernet was invented by Xerox in 1973. Xerox teamed up with Intel and Digital Equipment Corporation (DEC) to develop DIX Ethernet which eventually became the Ethernet. These companies handed over the responsibility of developing the Ethernet standards to the IEEE in the early 1980s. The IEEE formed two committees to work on the Ethernet -- IEEE 802.3 committee and IEEE 802.2 committee. The IEEE 802.3 committee deals with the physical layer standards and a subpart of the data link standards. The IEEE 802.2 committee deals with the higher functions of the data link layer.

Ethernet Operation

The Ethernet uses the media access method that provides all the hosts connected on a network with the same bandwidth. It is scalable because new technologies like Fast Ethernet and Gigabit Ethernet can easily be integrated. It can be easily implemented and used in both data-link and physical layers.

The Ethernet uses the Carrier Sense Multiple Access/Collision Detection (CSMA/CD) mechanism to enable devices to share information in a shared environment using the same bandwidth at the same time. When two devices try to send packets at the same time, there is a possibility of collision between the two packets. The CSMA/CD is used to solve this problem.

Carrier Sense and Multiple Access

When a host wants to send a frame on the network, the host first needs to check if there is any other digital signal on the wire. If the transmission occurs via a copper cable, then the host checks for signals by examining the voltage levels on the wire.

If the transmission occurs via a fibre optic cable, then the host checks for signals by examining the light frequencies on the wire. If the host detects a frame on the wire, then it waits for the transmission to complete before sending its own frame. If the host does not detect a frame, then it sends its frame.

If two or more devices simultaneously sense the wire and send their frames at the same time, then a collision will occur. Now, if a host senses another signal on the wire, then it sends a jam signal to all the nodes. On receiving this signal, all the nodes stop sending the frames and wait for a random period before starting to sense again. Figure 1 illustrates the CSMA/CD.

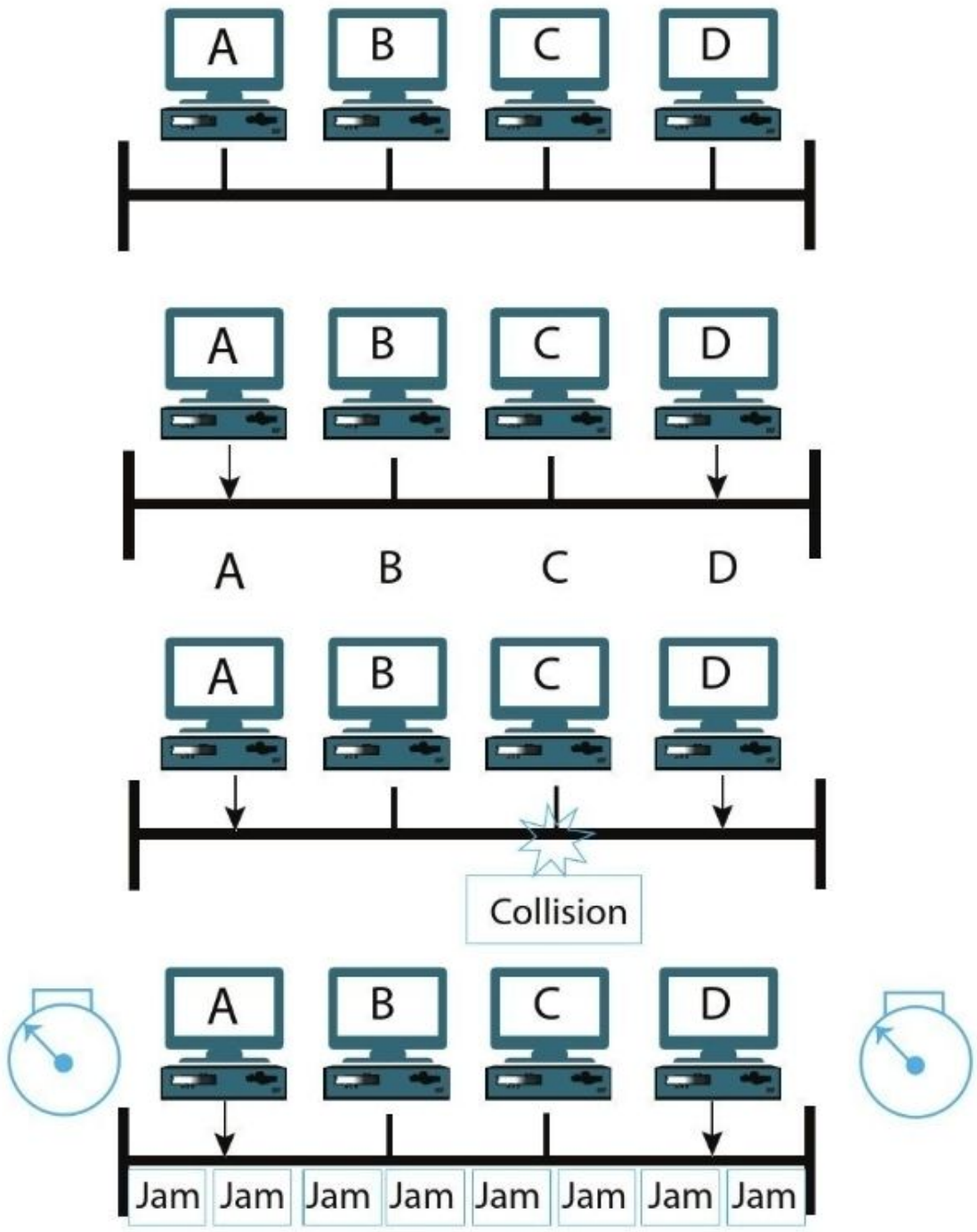

Figure 1: CSMA/CD

IMPORTANT NOTES

In full duplex mode, no collisions occur and this mode has private collision domain and higher throughput.

More the number of devices placed on the Ethernet, more are the chances of collisions. More collisions in a network affect the throughput, increase the delay and congestion in the network.

Ethernet at the Data-link Layer

CERTIFICATION OBJECTIVE

Describe hardware addressing
Understand framing in Ethernet

At the data-link layer, the Ethernet provides hardware addressing which is commonly known as MAC address. The Ethernet also frames the packets received from the network layer and prepares them for transmission on the LAN.

Ethernet Addressing

Every node on the Ethernet has its own Network Interface Card (NIC). The NIC has a Media Access Control (MAC) address of 48 bits (6 bits) burnt on it. The MAC address is written using a hexadecimal notation separated by a colon. For example, **4A:30:10:21:10:1A** is an Ethernet MAC address. Figure 2 shows the format of a MAC address and how the bits are divided.

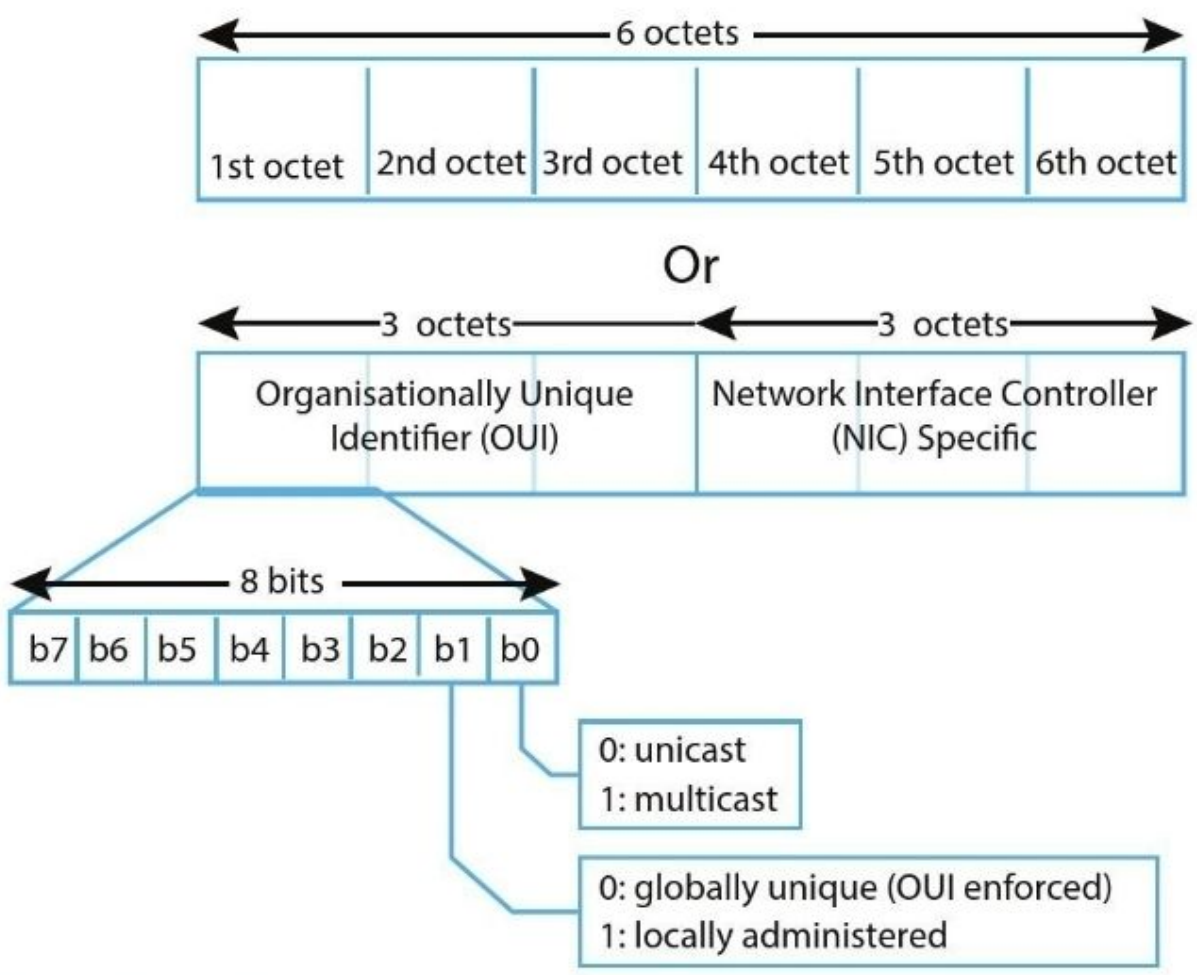

Figure 2: MAC address format

The first three octets contain the Organisation Unique Identifier (OUI) assigned by the IEEE to an organisation. The second three octets contain the values assigned by the network interface controller (NIC) provided by each vendor. In the first octet assigned to the OUI, the least significant bit determines whether it is a unicast address or a multicast address. The second least significant bit determines whether it is a globally administered or a locally administered address.

IMPORTANT NOTES

A locally administered address is an address assigned to a device by a network administrator by overriding the burned-in address.

Ethernet Frames

The data-link combines bits into bytes and bytes into frames. The packets transferred to the network layer are encapsulated in the frames. The framing defines how to interpret the bits. The Ethernet passes data frames between stations in a MAC frame format. The IEEE 802.3 frame was developed by Novell and Ethernet II is a DIX frame (named after DEC, Intel, and Xerox). Ethernet II is the most common frame because it is directly used by the Internet Protocol (IP). The IEEE 802.3 has two sublayers -- LLC and MAC, but Ethernet II does not. The frame formats of IEEE 802.3 and Ethernet II are shown in Figures 3 and 4, respectively.

Preamble (7 bytes)	Start of Frame Delimiter (1 byte)	Dest. Address (6 bytes)	Soure Address (6 bytes)	Length (2 bytes)	802.2 Header+Data (46-1500 bytes)	Frame Checksum (4 bytes)

Figure 3: IEEE 802.3 Ethernet frame format

Preamble (8 bytes)	Dest. Address (6 bytes)	Soure Address (6 bytes)	Type (2 bytes)	Data (46-1500 bytes)	Frame Checksum (4 bytes)

Figure 4: Ethernet II Frame format

A brief description of the different fields in an 802.3 and an Ethernet frame is provided below:

Preamble: This field has alternating bits of 0s and 1s. This field alerts the receiver's clock about the incoming frame thereby enabling it to synchronise with the sender's clock.

Start of Frame Delimiter: This field has a byte sequence of 10101011, which denotes the start of the frame. The last two bits $(11)_2$ are the flags which alert the receiver that the next field is the destination address.

In Ethernet II, the preamble and the SFD fields are merged. However, the contents of the first 8 bytes remain the same.

Destination Address: This is the 6 bytes MAC address of the destination node.

Source Address: This is the 6 bytes MAC address of the sending node.

Length or Type: 802.3 uses the Length field and the Ethernet uses the Type field. This field is used to determine the network layer field. It denotes the type of packet being sent.

Data: This field contains the data encapsulated by the upper layer protocols. The field size can be a minimum of 46 bytes and a maximum of 1500 bytes. If the size is less than 46 bytes, then this field is padded with extra 0s.

Frame Checksum: This field contains a 32-bit hash code of the data representing the error detection information. The CRC is calculated over the data, type, and address field. The receiver calculates the checksum and if it is not zero, then the packet is discarded.

IMPORTANT NOTES

Both versions of the Ethernet can coexist in the same network. But, an NIC running only 802.3 will discard any Ethernet II frames, and an NIC running only Ethernet II will discard the 802.3 frame because of the difference in frame format.

ANSWER IT

1. An Ethernet frame consists of: MAC address
   a. IP address
   b. Port address
   c. Both A and B
   d. Neither
2. MAC address is of:
   a. 24 bits
   b. 36 bits
   c. 42 bits
   d. 48 bits
3. In Ethernet frame, both destination and sender address contains:
   a. 1 Byte
   b. 2 Bytes
   c. 4 Bytes
   d. 6 Bytes
4. _____ is the most widely used local area network protocol.
   a. Token Ring
   b. Token Bus
   c. Ethernet
   d. none of the above
5. In Ethernet addressing, if the least significant bit of the first byte is 0, the address is _____.
   a. unicast
   b. multicast
   c. broadcast
   d. none of the above

Ethernet at the Physical Layer

The Ethernet was first developed by DEC, Intel, and Xerox. In 1970s, Robert Metcalfe and David Boggs developed the Ethernet LAN. Since its development, the Ethernet LAN has evolved over four generations as shown in Figure 5.

CERTIFICATION OBJECTIVE

Describe the original and expanded Ethernet standards

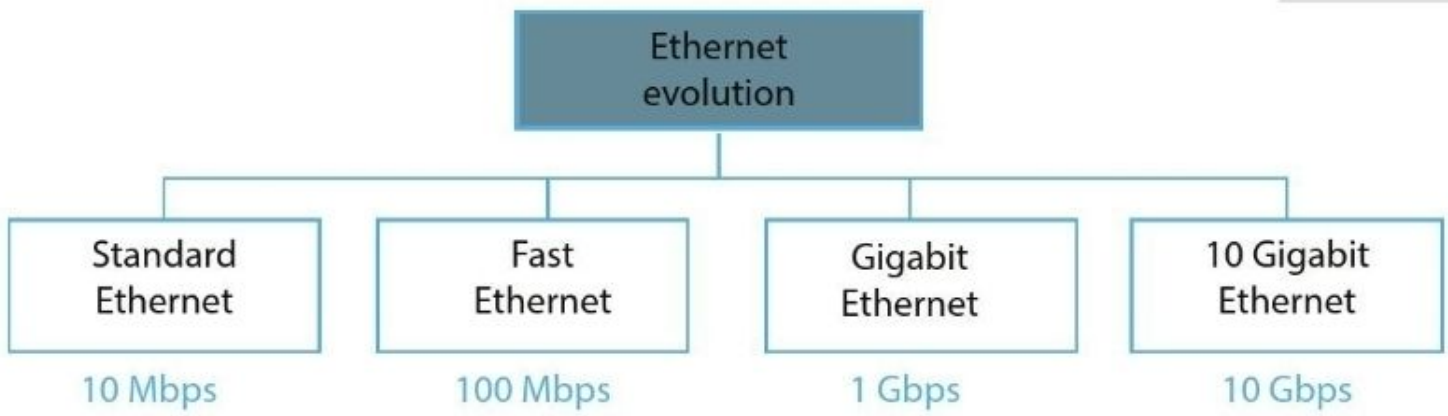

Figure 5: Ethernet Evolution

The original IEEE 802.3 standards are:

10Base5: This standard is also known as thick Ethernet. This standard uses the bus topology and the cable is very thick and very tough to bend. The cable can be up to 500 meters in length. The transceiver is connected externally to the cable. The transceiver is used for transmitting, receiving, and detecting collisions. It is connected to the cable via a transceiver cable and can be expanded up to 2500 meters and supports 1024 users for all segments. Figure 6 shows the 10Base5 implementation.

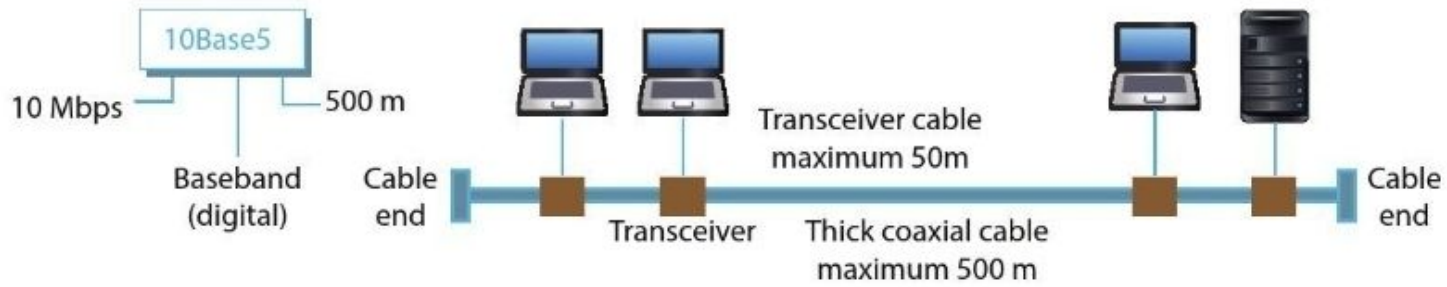

Figure 6: 10Base5 implementation

10Base2: This standard is also known as thin Ethernet. The cable is much thinner and flexible than the 10Base5 standard and uses the bus topology. The cable can be up to 185 meters in length. The transceiver is normally a part of the NIC installed in the node. Figure 7 shows the 10Base2 implementation.

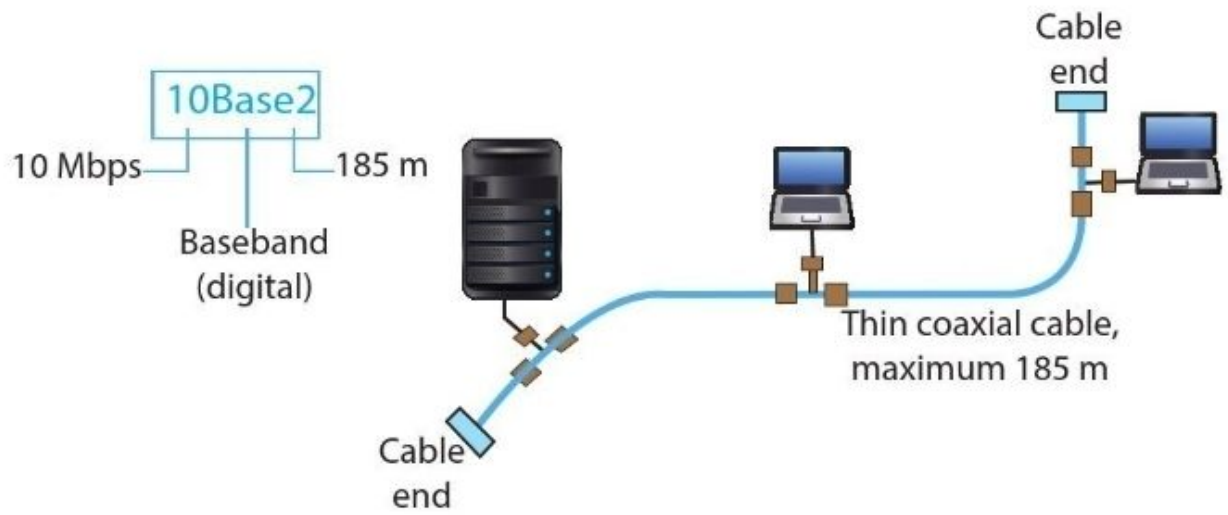

Figure 7: 10Base2 implementation

10Base-T: This standard is also known as twisted pair Ethernet. The cable is up to 100 meters in length. This uses the star topology and the station is connected to

a hub. Any collision that occurs happens at the hub instead of the cable. It uses a RJ45 connector. Figure 8 shows the 10Base-T implementation.

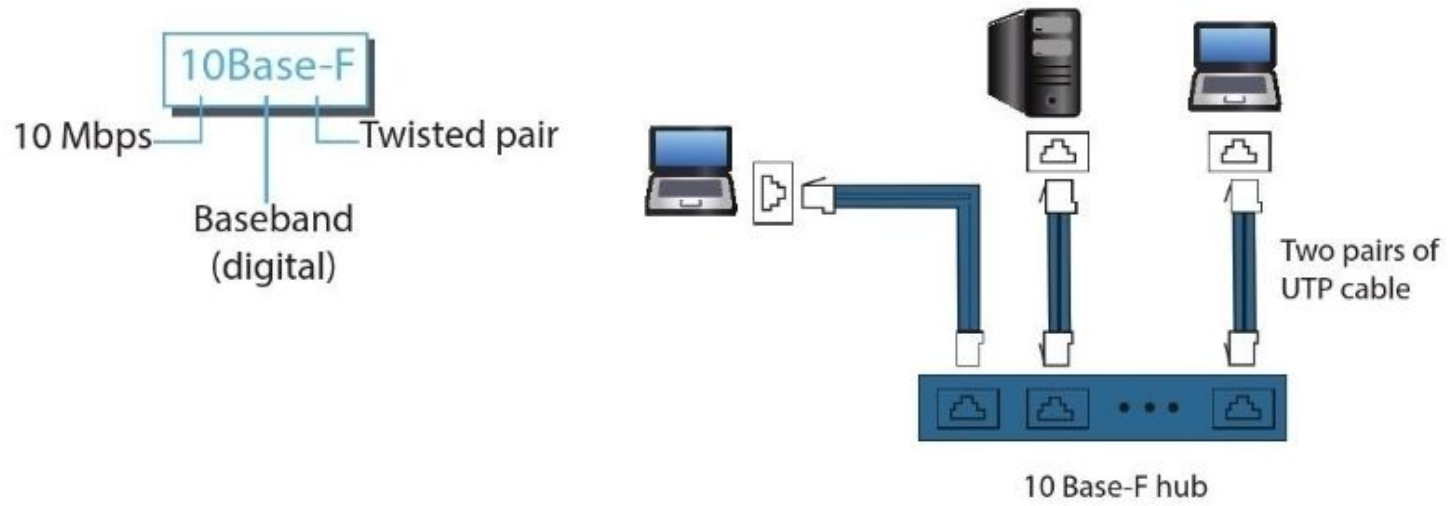

Figure 8: 10Base-T implementation

10Base-F: This standard is also known as fibre Ethernet. This standard uses the star topology and the station is connected to a hub. Figure 9 shows the 10Base-F implementation.

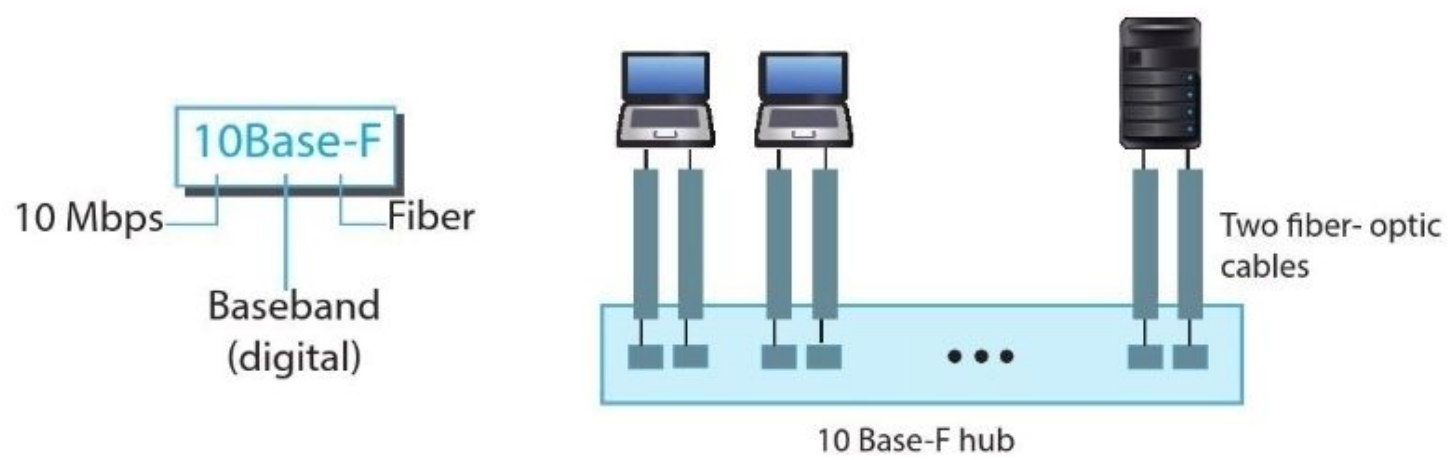

Figure 9: 10Base-F implementation

The 802.3 standards define an Attachment Unit Interface (AUI) to transfer one bit at a time. The original AUI was a 15-pin connector that allowed 15-pin-to-twisted-pair connections. The AUI was not able to support 100 Mbps Ethernet because of high frequencies. Therefore, a new interface, Media Independent Interface (MII), was developed which provided 100 Mbps throughput. It uses a nibble (4 bits). Gigabit Ethernet uses the Gigabit Media Independent Interface (GMII) which transmits 8 bits at a time.

The expanded IEEE 802.3 standards are:

100BaseTX (IEEE 802.3u): This standard uses a category 5, 6, or 7 UTP two-pair cable. It supports one user per segment and is up to 100 meters long. It uses an RJ45 connector. It has a physical star topology and logical bus.

100BaseFX (IEEE 802.3u): This standard uses a fibre cabling of 62.5/125-micron multimode fibre with SC and ST connectors which are media connectors. It has a physical star topology and logical bus. It is up to 400 meters long in half-duplex mode and 2000 meters long in full-duplex mode.

IMPORTANT NOTES

Now, 10Base5 and 10Base2 are rarely used; and 10BaseT has been replaced by 100BaseTX and 1000BaseT.

100BaseCX (IEEE 802.3z): This standard uses a shielded twisted pair copper cable up to 25 meters long.

1000BaseT (IEEE 802.3ab): This standard uses a category 5E and a category 6 four-pair UTP with RJ-45 connector and is up to 100 meters long.

1000BaseSX (IEEE 802.3z): This standard uses a 62.5/50-micron multimode fibre cable. It is up to 550 meters long.

1000BaseLX (IEEE 802.3z): This standard uses a single mode fibre that uses 9-micron core and can range from 3 kilometres to 10 kilometres.

Ethernet Cabling

In Ethernet, guided media is used for transferring the data. In the guided media, a conduit is provided from one device to another. It includes a twisted pair cable, a coaxial cable and a fibre-optic cable. A signal travelling from this kind of media has the limits of that of the physical medium. The twisted pair cable and the coaxial cables use a copper wire that transports the signal in the form of current. A fibre-optic cable transports the signal in the form of light.

CERTIFICATION OBJECTIVE

Compare the different types of cables

Twisted-Pair Cable

A twisted pair cable has two conductors twisted together as shown in Figure 10. Each conductor has its own plastic insulation. One wire is used to carry signals and the other is used for ground reference.

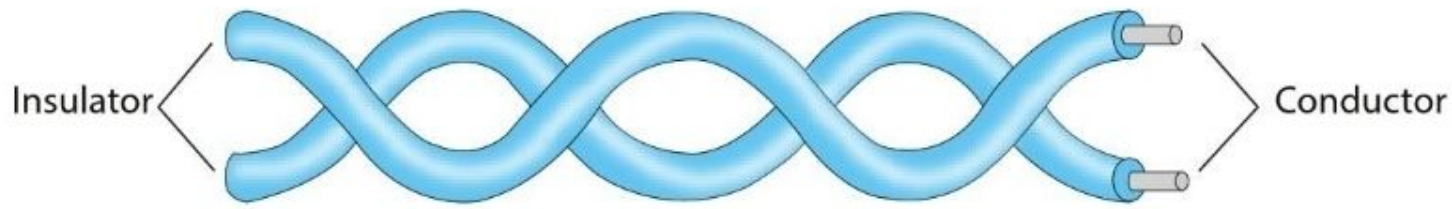

Figure 10: Twisted Pair Cable

Unshielded Versus Shielded Twisted-Pair Cable

The unshielded twisted pair cable has no metal shield over it. The shielded twisted pair cable was produced by IBM and has a metal shield or a braided mesh over it. The metal shield improves the quality of the cable but it is bulkier and more expensive. Figure 11 shows a UTP and an STP.

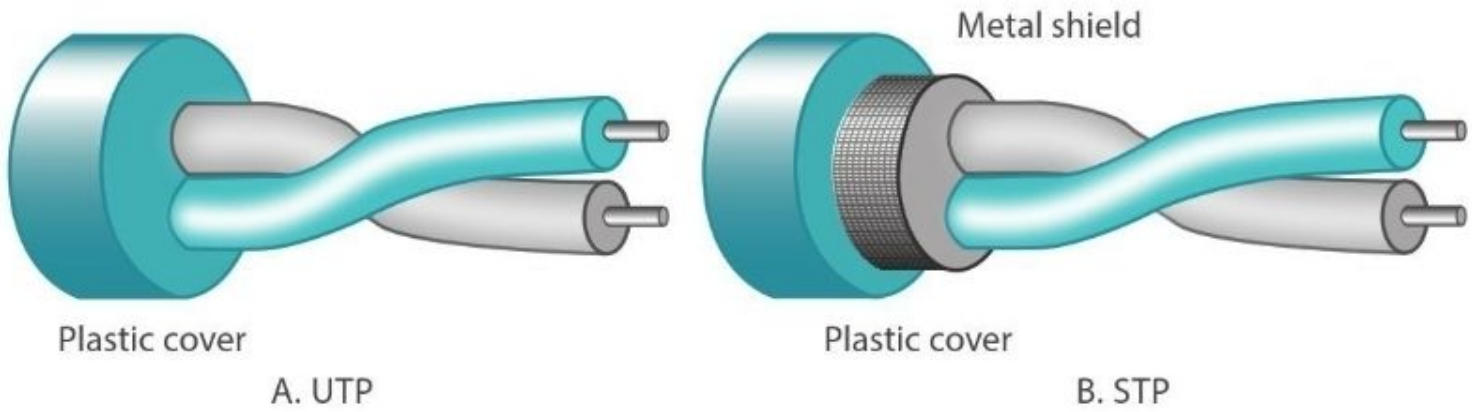

Figure 11: UTP and STP

The UTP cable has eight wires in it. There are three types of implementation used for the pinouts of the two sides of the wire: straight-through, crossover, and rolled cable. Pinout is the colour of the wire used in the cable. The wire colours used are:

1. White and orange striped
2. Solid orange
3. White and green striped
4. Solid blue
5. White and blue striped
6. Solid green
7. White and brown striped
8. Solid brown

The Electronic Industries Association (EIA) has developed a standard based on cable quality to classify the UTP cable in seven categories. Table 1 shows the categories, data-rate, and applications of the UTP cable.

Table 1. Categories of cables

Category	Data-rate (Mbps)	Use
1	< 0.1	Telephone
2	2	Token ring
3	10	Ethernet 10BaseT
4	20	Token ring
5	100	Ethernet
5E	125	Ethernet
6	200	Ethernet
7	600	Ethernet

Straight-through cable

In a straight-through UTP cable, pin 1 on one end is connected to pin 1 on the other end, pin 2 on one end is connected to pin 2 on the other end, and so on as shown in Figure 12. A straight-through cable is used for DTE-to-DCE (Data Termination Equipment to Data Communications Equipment) connections. It is used to connect the:

1. Host to switch or hub
2. Router to switch or hub

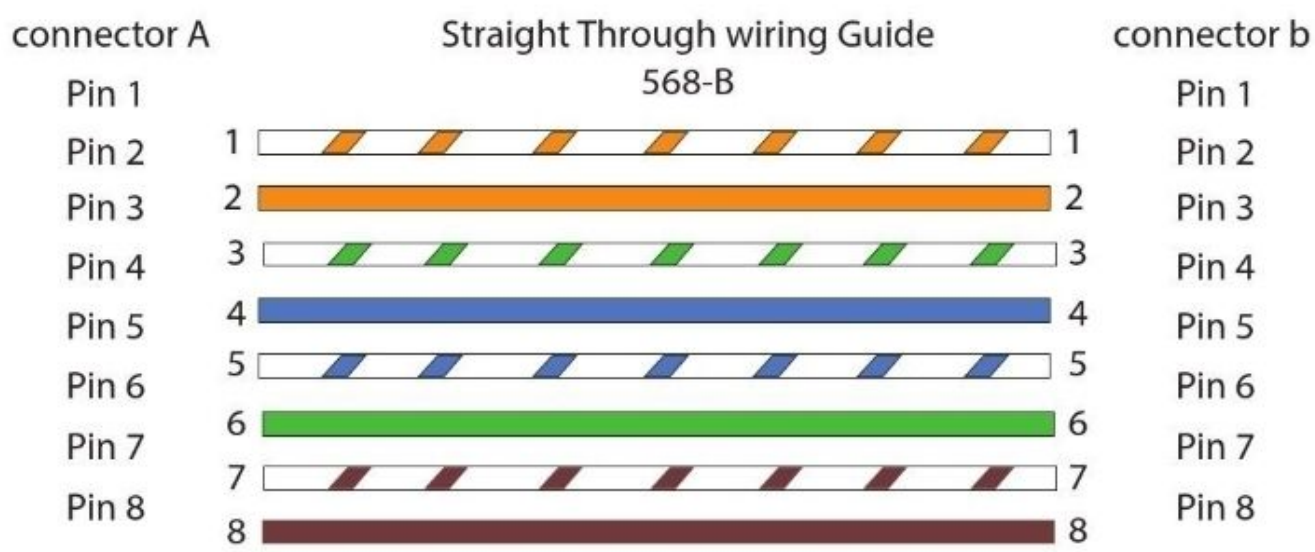

Figure 12: Straight-through cabling

Crossover cable

In a crossover UTP cable, two sets of wires cross over: pin 1 on one side is connected to pin 3 on the other, and pin 2 is connected to pin 6 as shown in Figure 13. It is used to connect:

- Switch to switch
- Hub to hub
- Host to host
- Hub to switch
- Router direct to host

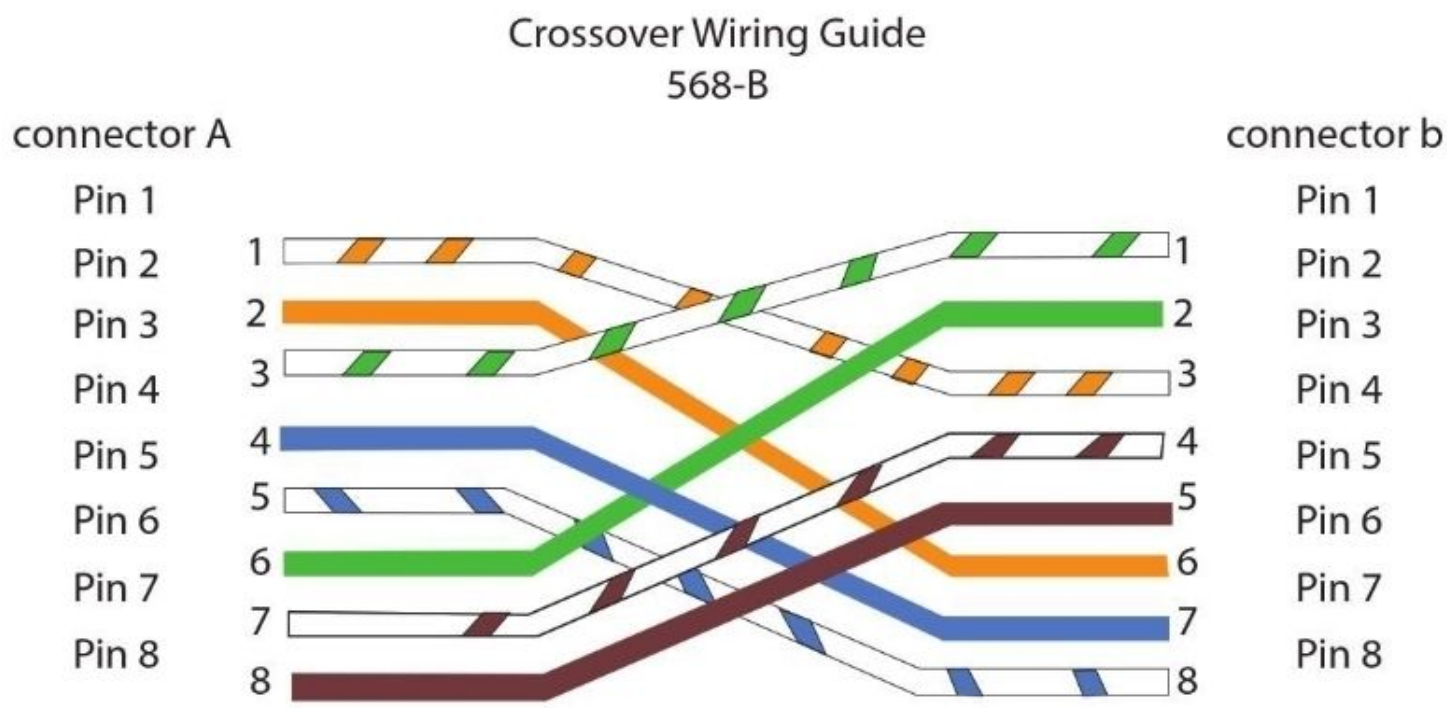

Figure 13: Crossover cabling

Rolled cable

A rolled cable is used to connect the host to a router console serial communication port. They have opposite pin assignments on each end of the cable, that is, pin 1 on one side is connected to pin 8 on other side, pin 2 to pin 7 and so on as shown in Figure 14.

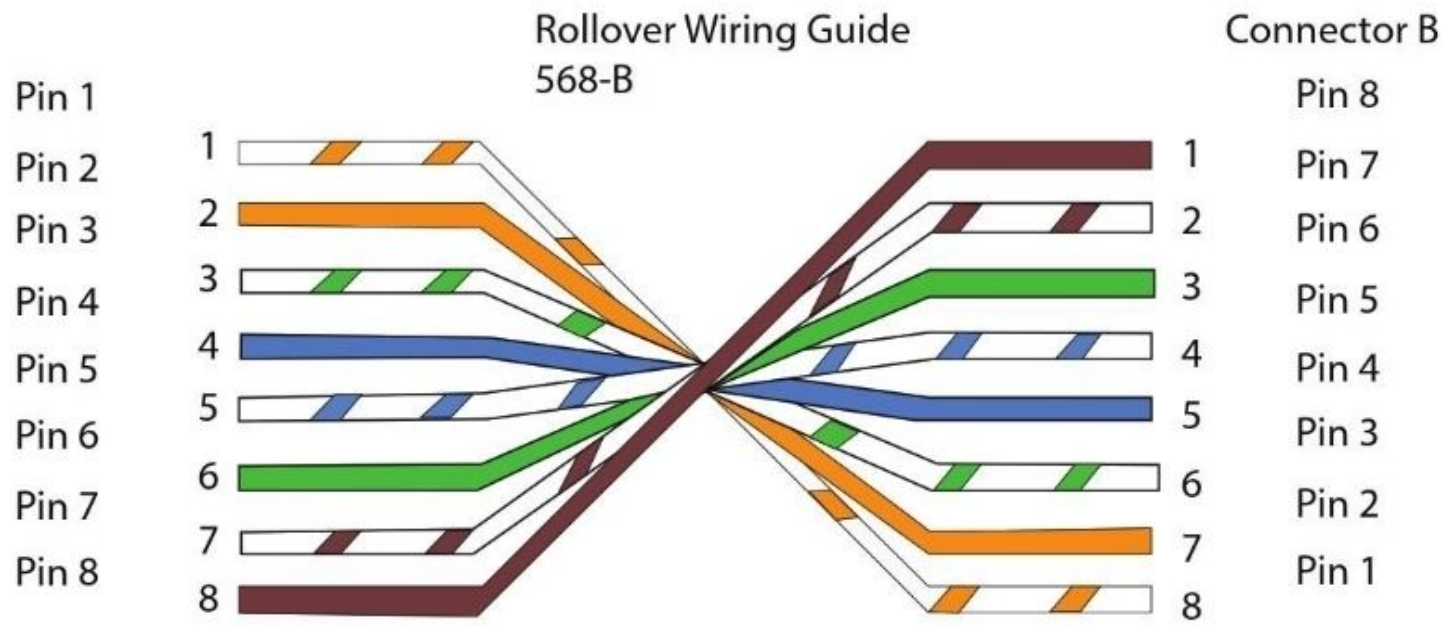

Figure 14: Rolled cabling

Connector

The UTP cables use an RJ45 connector, where RJ stands for Registered Jack, as shown in Figure 15. It is an 8-pin modular keyed connector. Keyed means that the connector can be inserted only in one way.

IMPORTANT NOTES

A crossover cable is used for DTE-to-DTE and DCE-to-DCE devices and a straight-through cable is used for DTE-to-DCE connections. A DTE device is a PC, file server, or router. A DCE device is a hub or a switch.

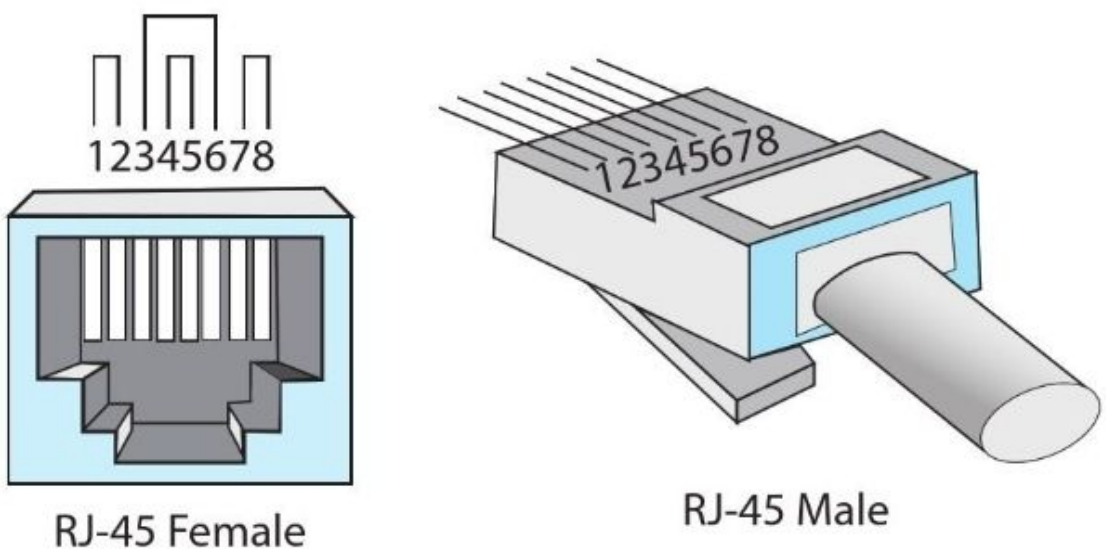

Figure 15: RJ45 Connector

Performance

The performance of the twisted-pair cable is determined by comparing attenuation versus frequency and distance. A twisted-pair cable can have a wide range of frequency. When the frequency increases above 100 kHz, the attenuation, which

is measured in decibels per kilometre (dB/km), also increases above 100 kHz. The thickness of a wire is measured by a gauge.

Applications

The twisted-pair cables are used in telephone lines to provide voice and data channels. The local loop is the line that connects subscribers to the central telephone office. It consists of unshielded twisted-pair cables. The DSL lines also use unshielded twisted-pair cables.

Coaxial Cable

In a coaxial cable, a central conductor is enclosed in an insulator, which is encased in an outer conductor made of metal foil or braid. The outer conductor is also enclosed in an insulator, and then the whole wire is coved in plastic. A coaxial cable carries signals of higher frequency than the twisted pair. Figure 16 shows a coaxial cable. It is used in thick Ethernet as well as thin Ethernet. The coaxial cable has a high bandwidth but the signal weakens rapidly and requires frequent use of repeaters.

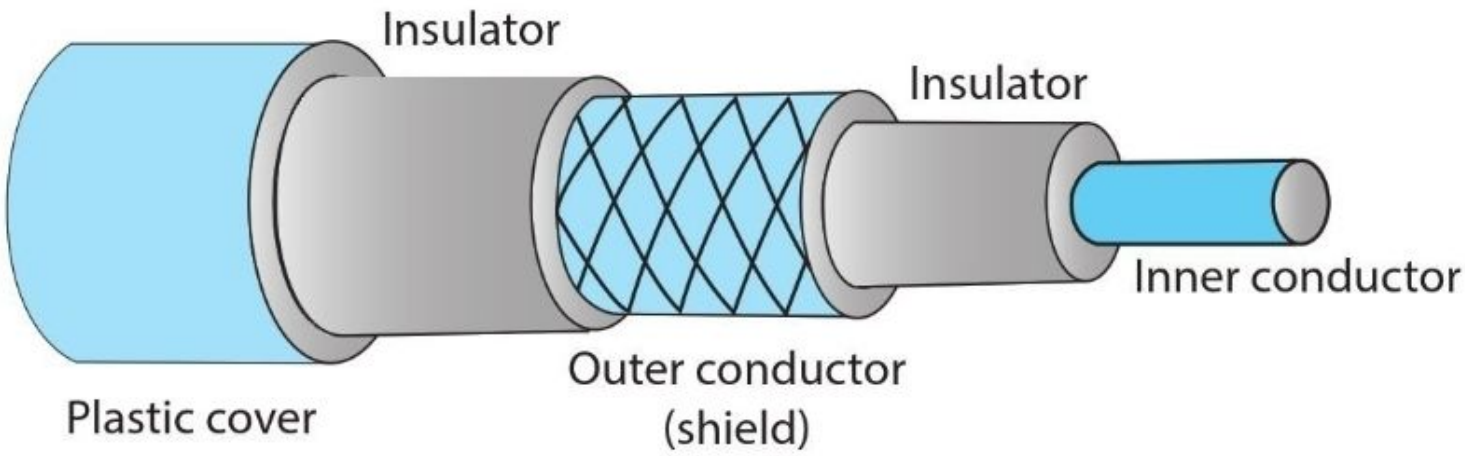

Figure 16: Coaxial Cable

Coaxial Cable Standards

Coaxial cables are categorised on the basis of their Radio Government (RG) ratings, as shown in Table 2. Each RG number denotes a unique set of physical specifications, including the wire gauge of the inner conductor, the thickness and type of the inner insulator, the construction of the shield, and the size and type of the outer casing adapted for a specialised function.

Table 2. Categories of Coaxial cable

Category	Impedance	Use
RG-59	75 Ω	Cable TV
RG-58	50 Ω	Thin Ethernet
RG-11	50 Ω	Thick Ethernet

ThickNet cables

ThickNet is also known as 10base5. It is an Ethernet standard that uses coaxial cable to transmit Ethernet frames at the rate of 10 Mbps. It derives its name due to its usage of thick coaxial cable which has a diameter of 0.375 inches.

This cable is also referred to as 'yellow cable' or 'orange cable' due to its outer insulation. Its outer insulation or jacket is made of either PVC (yellow) or Teflon (orange). This makes the cable stiff and inflexible. In this cable, there is a solid centre conductor surrounded by an insulating filler made of foam, as well as a shielding braid. This cable has a characteristic impedance of 50 ohms. The examples of coaxial cables are Belden numbers 9880 and 89880.

The ThickNet cable uses the bus topology in which all the nodes or devices are connected in a linear manner to the backbone cable. It has 50 ohm resistive terminators at each physical end of the network. Maximum number of connected nodes are 100.

The ThickNet is the original Ethernet specification, but it was superseded by 10base2 (also known as 'ThinNet'). Now, it is an obsolete computer networking technology.

ThinNet Cables

ThinNet is also known as 10base2. It is an Ethernet standard using RG-58 coaxial communications cables connected to BNC T-connectors. These cables got their name due to the use of thin and relatively inexpensive coaxial cables that have a diameter of 5 millimetres (0.2 inches).

These cables have a minimum length of 0.5 meters. You can add a maximum of 30 devices to a single ThinNet port per segment known as 'daisy chain'. A maximum

of 3 repeater devices are used to connect two network devices; and a maximum of 5 connected segments are allowed. These cables have an impedance of 50 ohms, so 50 ohm terminators are required for termination at the physical end of the network. The ThinNet is ideal for smaller networks.

The ThinNet was the most popular cable in 10 Mbps Ethernet standards. It was used for home desktop machines, but now, it is superseded by standards such as low-cost Category 5 cable, Wireless Local Area Network (WLAN) standards, and Ethernet standards featuring much faster transmission rates (i.e. 100 Mbps or higher). Now, it is an obsolete computer networking technology.

Coaxial Cable Connectors

The most common coaxial connector is the Bayonet Neill-Concelman (BNC) connector. Figure 17 shows three popular types of these connectors: the BNC connector, the BNC T connector, and the BNC terminator.

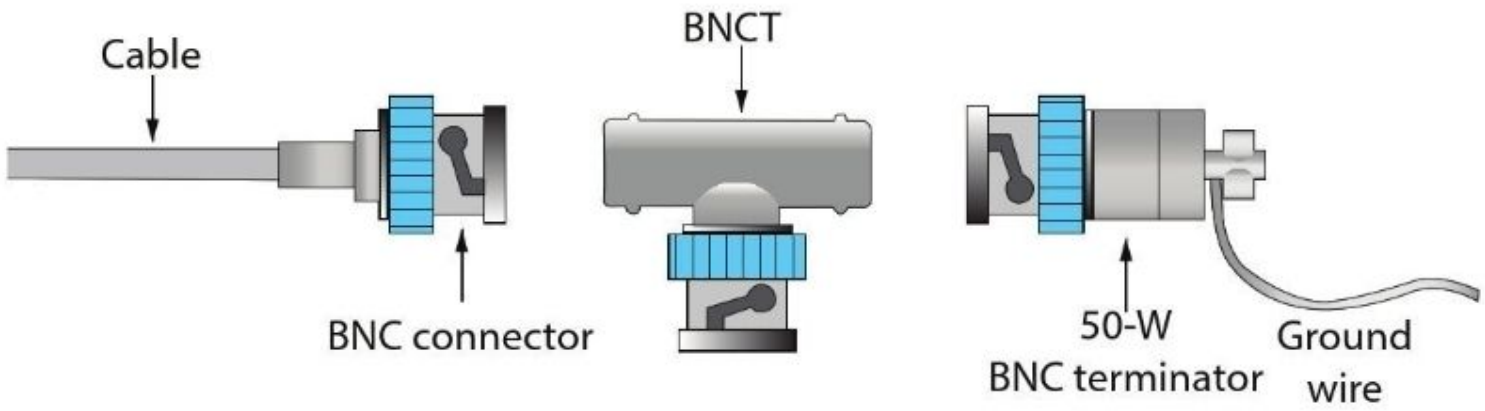

Figure 17: BNC connectors

The BNC connector is used to connect the end of the cable to a device, such as a TV set. The BNC T connector is used to extend the connection to a computer or some other device. The BNC terminator is used at the end of the cable to prevent the reflection of the signal.

Applications

The coaxial cables were used in analog telephone networks. They could carry 10,000 voice signals. Then, they were used in digital telephone networks where a single coaxial cable could carry digital data up to 600 Mbps. But, now-a-days, the coaxial cables in telephone networks have largely been replaced with fibre-optic cables.

The Coaxial cables are also used in cable TV networks. Now, they have been replaced by the fibre-optic cable. However, hybrid networks still use the coaxial cable at network boundaries, near the consumer premises. Cable TV uses RG-59 coaxial cable.

Fibre-Optic Cable

A fibre-optic cable is used to provide very high speeds across very large distances. But, fibre-optic cabling is expensive to implement, difficult to troubleshoot, and difficult to install. Reflection is used to guide light in the optical fibres. In the fibre-optic cable, a glass or plastic core is surrounded by a cladding of less dense glass or plastic as shown in Figure 18. The difference of density should reflect the beam instead of refracting.

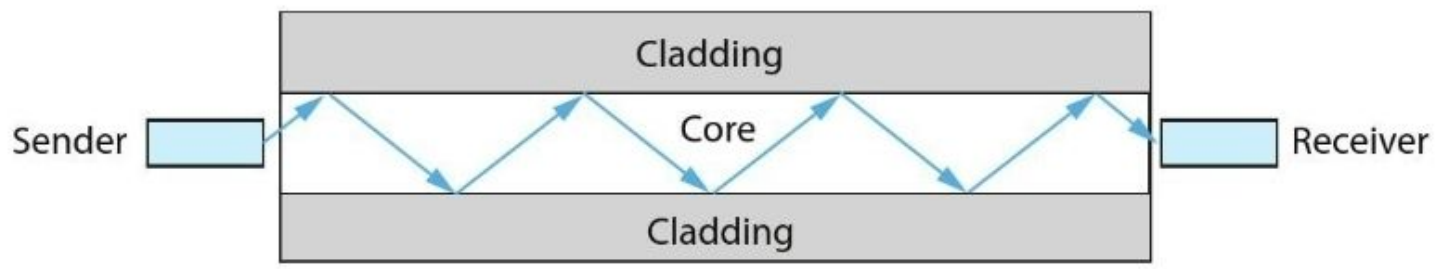

Figure 18: Optical fibre

The Fibre-optic cables use two types of fibre for data connections: multimode (MMF) and single-mode (SMF). The multimode fibre has a thickness of 62.5/125 microns. The single-mode fibre transmits 1300 or 1550 nm light and uses a laser as the light source.

The Fibre-optic cable uses three types of connectors, as shown in Figure 19:

- The Subscriber channel (SC) connector provides excellent packing density. They have a push-pull design that reduces the chance of the fibre end face contact damage during connection. They are used to connect cable TV.
- The Straight-tip (ST) connector has a key that prevents rotation of the ceramic ferrule, and a bayonet lock similar to a BNC. It has a single index tab which must be properly aligned with a slot before insertion. Then the bayonet interlock is engaged by pushing and twisting. They are used for connecting cables to networking devices.

- The MT-RJ connector is similar to the RJ45 connector. It uses form factor and latch. Two separate fibres are included in one unified connector. It is much easier to use than the ST or SC connectors. The two varieties of the MT-RJ connectors are pinned and no-pin. The pinned connectors have two small stainless steel guide pins on the face of the connector to mate with the no-pin connectors on the MT-RJ patch cords.

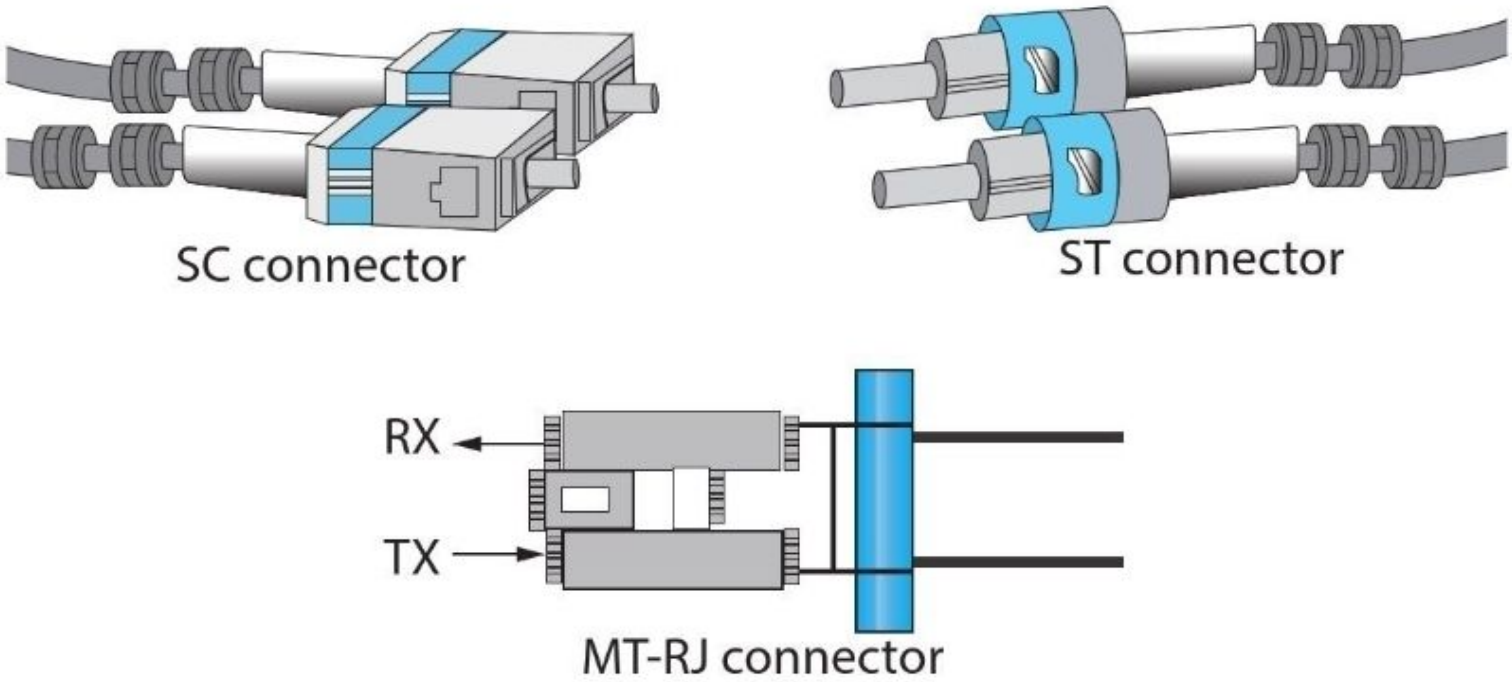

Figure 19: Fibre-optic connectors

Applications

The fibre-optic cable is used in backbone networks because of its wide bandwidth and cost-effective nature. Some cable TV companies use a combination of optical fibres and coaxial cables.

Recap

- The Ethernet uses the CSMA/CD, where if a device wants to transmit, it must first sense whether a transmission has already occurred or not.
- If a collision occurs, a jam signal is sent and two devices wait for a random period before sending a packet again.
- Two versions of the Ethernet frames are used: IEEE 802.3 and Ethernet II (or DIX).
- There is no sublayer in Ethernet II unlike IEEE 802.3, and it is most commonly used because the IP uses Ethernet II frame.
- MAC addresses are used in the Ethernet and they are in hexadecimal format.
- Copper and fibre-optic cables are used in the Ethernet networks.
- There are three types of UTP cables: straight-through, crossover, and rolled.
- The Fibre-optic cable provides great speed, but it is tough and expensive to install.

Test Your Skills

Multiple Choice Questions

1. Coaxial cables are widely used on
   a. Telephone networks
   b. Cable TV networks
   c. Broadband networks
   d. Ethernet
2. Twisting of wire reduces
   a. Interference
   b. Impulse noise
   c. Low frequency interference
   d. None of these above

3. What type of RJ45 UTP cable is used between switches?
   a. Straight-through
   b. Crossover cable
   c. Crossover with a CSU/DSU
   d. Crossover with a router in between the two switches
4. Which two Ethernet fibre-optic modes support distances of greater than 550 meters?
   a. 1000BASE-CX
   b. 100BASE-FX
   c. 1000BASE-LX
   d. 1000BASE-SX
5. Which type of connection should a straight-through cable be used for?
   a. Switch to switch
   b. Switch to hub
   c. Switch to router
   d. Hub to hub
6. Which of the following is a connector on a Category 5 cable with 10BaseT running across it?
   a. AUI
   b. DB-15
   c. RJ-45
   d. SC
7. Which statement is correct with regard to a MAC address?
   a. A MAC, or logical, address is a 48-bit (6-byte) address written in a hexadecimal format.
   b. A MAC, or hardware, address is a 64-bit (6-byte) address written in a hexadecimal format.

c. A MAC, or hardware, address is a 48-bit (6-byte) address written in a binary format.

d. A MAC, or hardware, address is a 48-bit (6-byte) address written in a hexadecimal format.

8. Which part of a MAC address is called the organisationally unique identifier (OUI)?

   a. The first 24 bits, or 3 bytes

   b. The first 12 bits, or 3 bytes

   c. The first 24 bits, or 6 bytes

   d. The first 32 bits, or 3 bytes

9. Which fields are contained within an IEEE Ethernet frame? (Choose two.)

   a. Source and destination MAC address

   b. Source and destination network address

   c. Source and destination MAC address and source and destination network address

   d. FCS field

10. How does a host on an Ethernet LAN know when to transmit after a collision has occurred? (Choose two.)

    a. In a CSMA/CD collision domain, multiple stations can successfully transmit data simultaneously.

    b. In a CSMA/CD collision domain, stations must wait until the media is not in use before transmitting.

    c. You can improve the CSMA/CD network by adding more hubs.

    d. After a collision, the station that detected the collision has priority to resend the lost data.

    e. After a collision, all stations run a random back off algorithm. When the back off delay period has expired, all stations have equal priority to transmit data.

    f. After a collision, all stations involved run an identical back off algorithm and then synchronise with each other prior to transmitting data.

Scenario Based Questions

1. What type of connection would be provided by the cable connection referred in the below table?

Pin	Colour	Function	Pin	Colour	Function
1	White/ Green	TX+	1	White/ Green	TX+
2	Green	TX-	2	Green	TX-
3	White/ Orange	RX+	3	White/ Orange	RX+
6	Orange	RX-	6	Orange	RX

   a. PC to router
   b. PC to switch
   c. Server to router
   d. Router to router

2. What type of connection would be provided by the cable connection referred in the below table?

Pin	Colour	Function	Pin	Colour	Function
1	White/ Green	TX+	3	White/ Green	RX+
2	Green	TX-	6	Green	RX-
3	White/ Orange	RX+	1	White/ Orange	TX+
6	Orange	RX-	2	Orange	TX-

   a. PC to router
   b. PC to switch
   c. Server to switch
   d. Switch to router

3. You need to connect a PC to a hub, the same hub to a switch, the same switch to another switch, and the second switch to a router. What kinds and numbers of UTP cables do you need for this network?
   a. Two straight-through and two crossover cables
   b. Three straight-through and one crossover
   c. One straight-through and two crossover cables
   d. Four straight-through cables
4. In the diagram below, identify the cable types required for connections A and B.

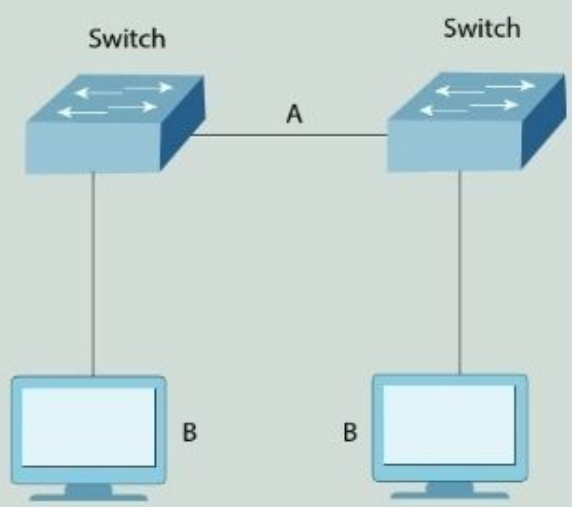

   a. A crossover, B crossover
   b. A crossover, B straight through
   c. A straight through, B straight through
   d. A straight through, B crossover
5. What cable type is shown in the below graphic?

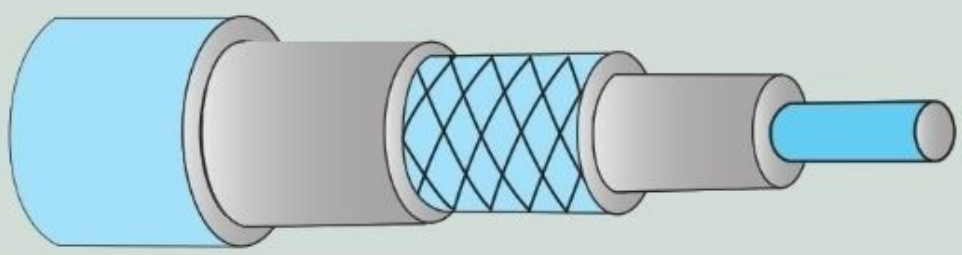

   a. Fibre optic
   b. Rollover
   c. Coaxial
   d. Full-duplex